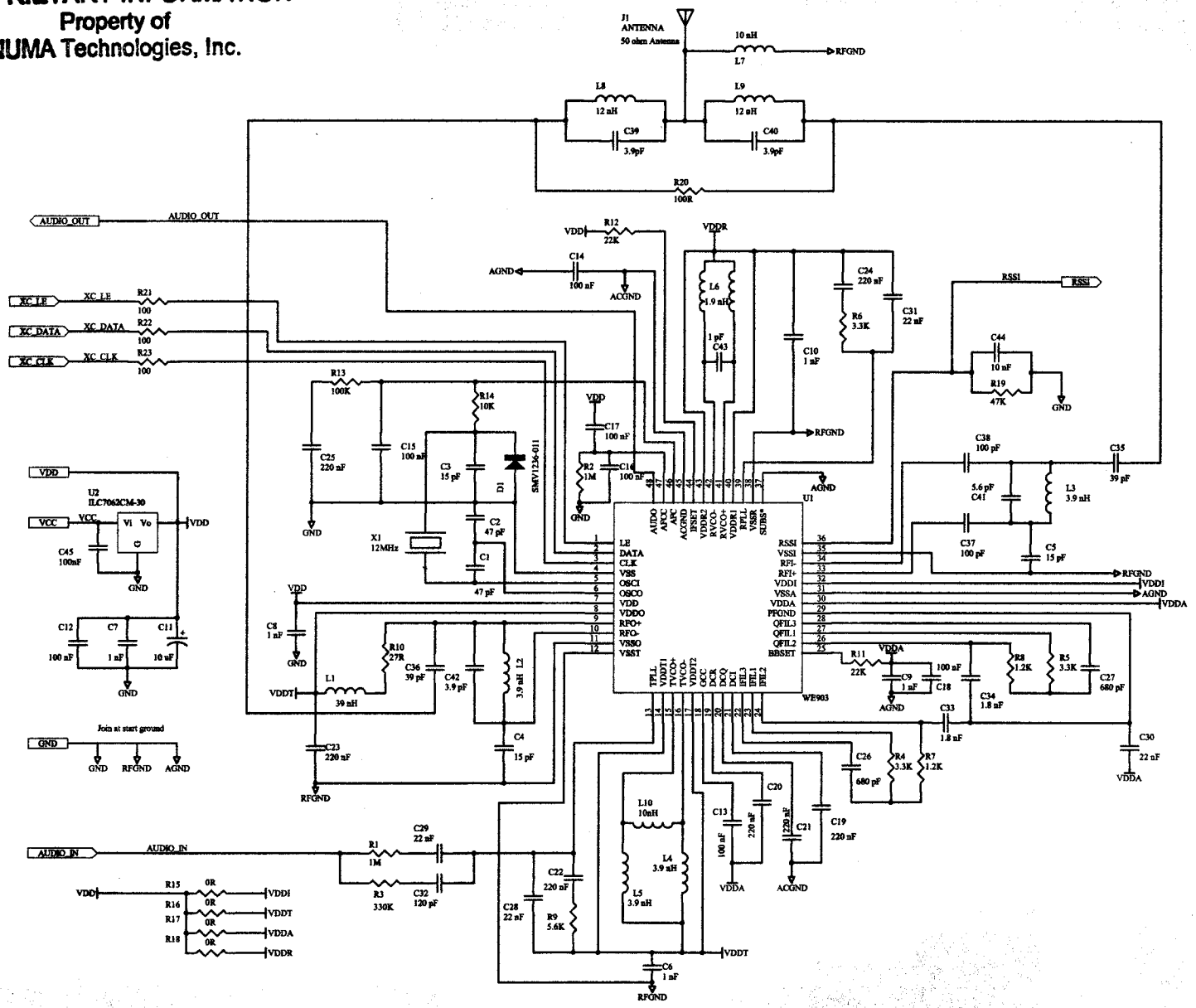PROPRIETARY INFORMATION
Property of
NUMA Technologies, Inc.